LOBERON
COMING HOME

20 min

2

AX8	BX8	CX8	DX1
ϕ8X100mm	8X22mm		

1

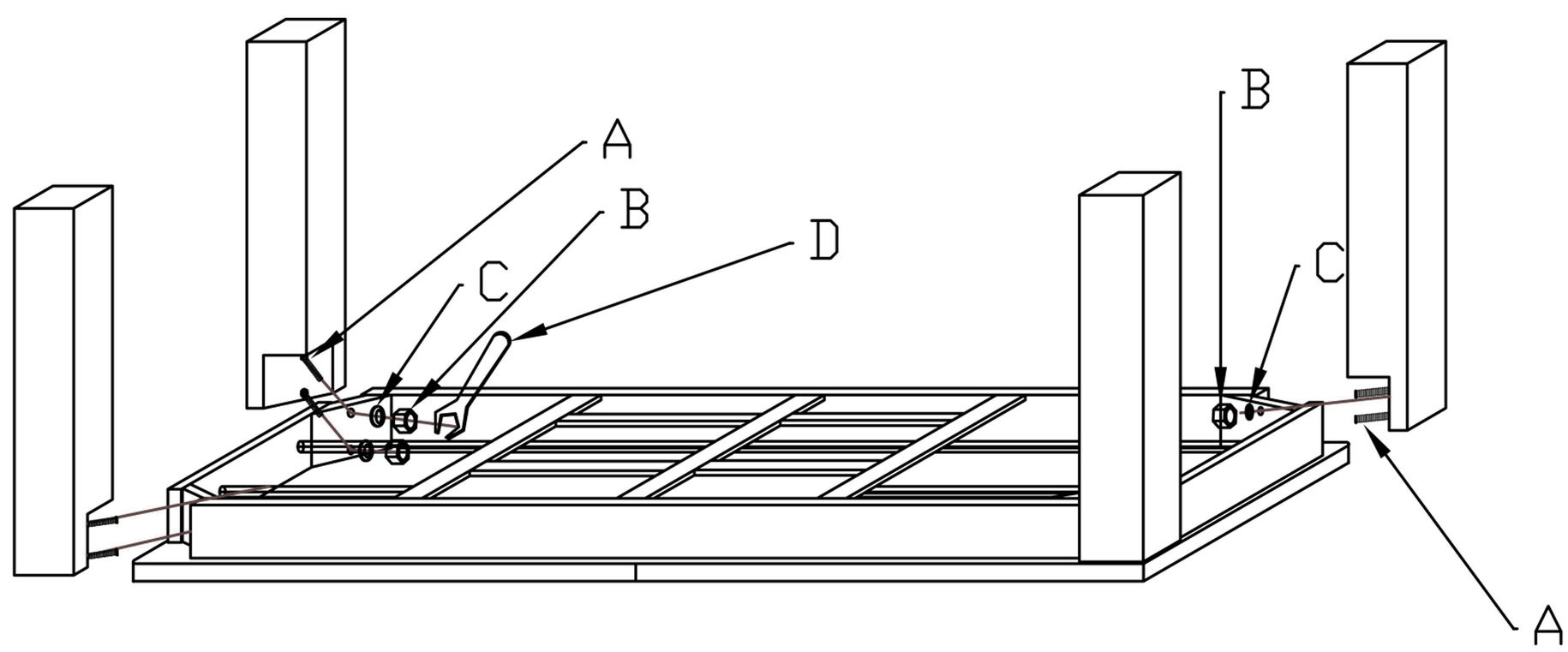
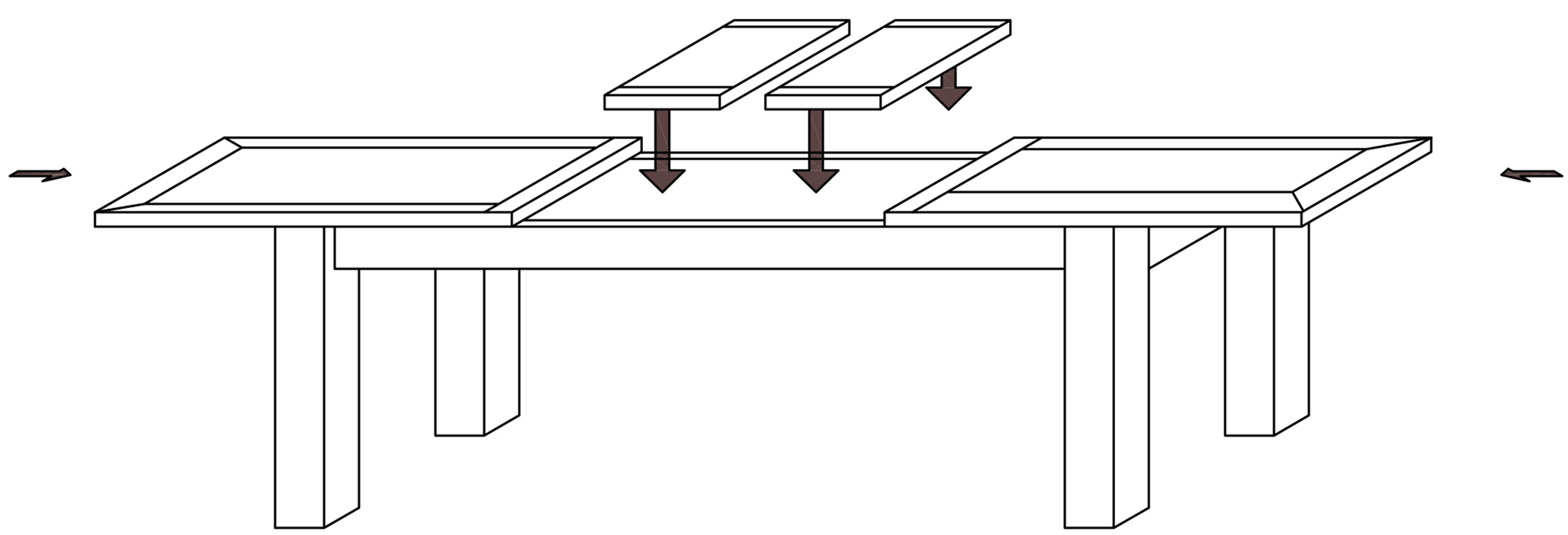
2